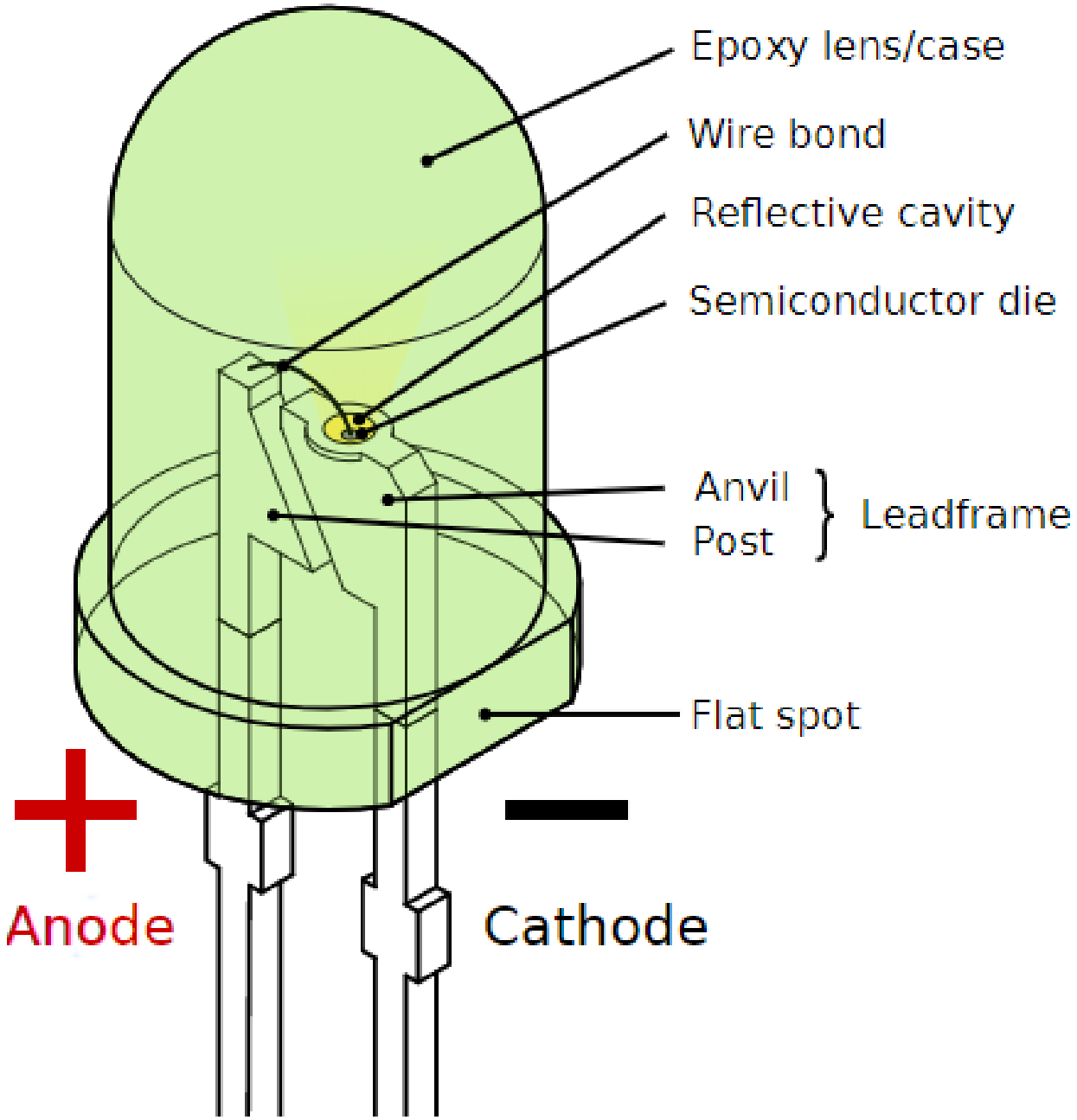
Epoxy lens/case
Wire bond
Reflective cavity
Semiconductor die
Anvil
Post
Leadframe
Flat spot
+
−
Anode
Cathode

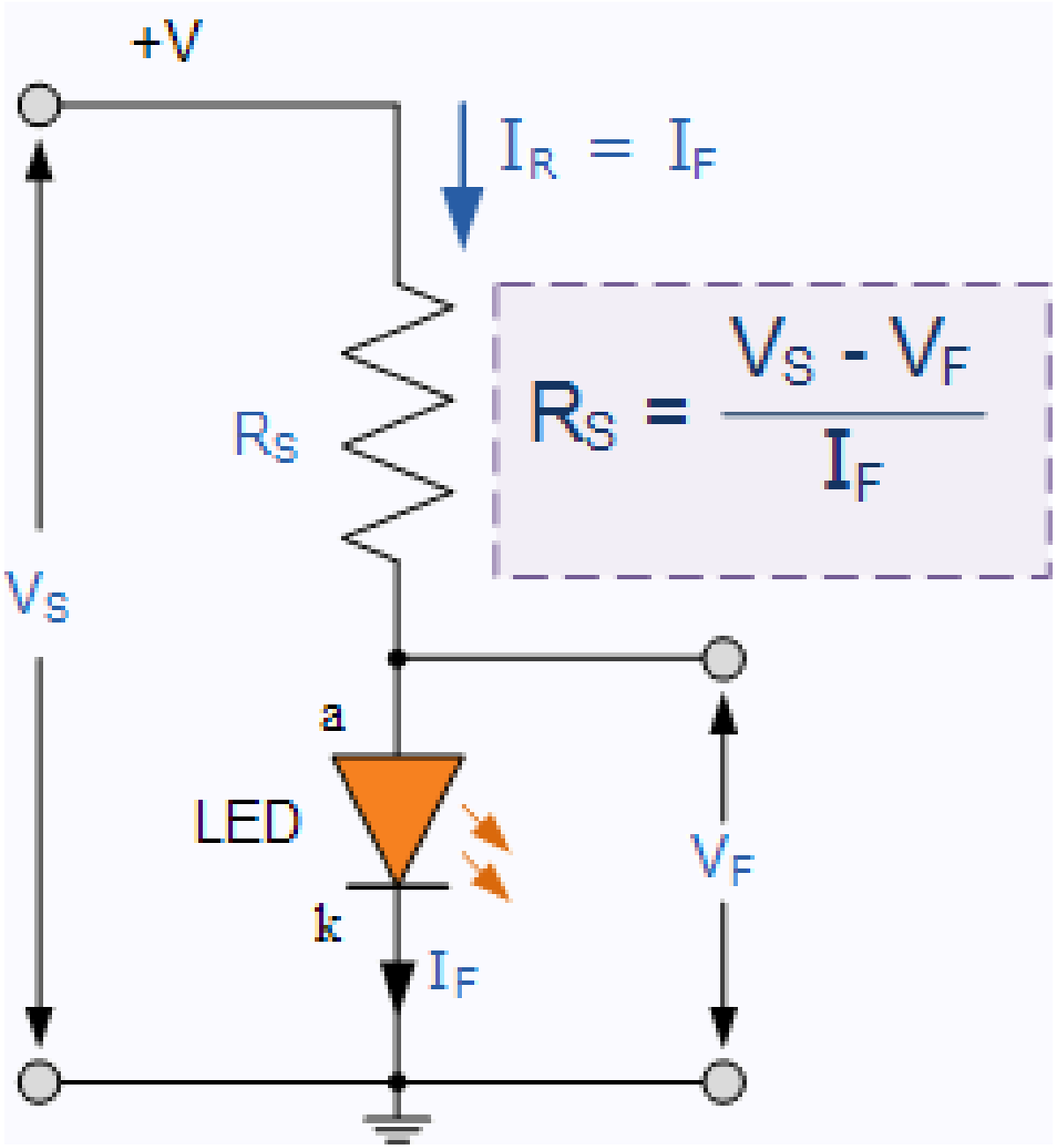
+V
$I_R = I_F$
$R_S = \frac{V_S - V_F}{I_F}$
R_S
V_S
a
LED
k
I_F
V_F

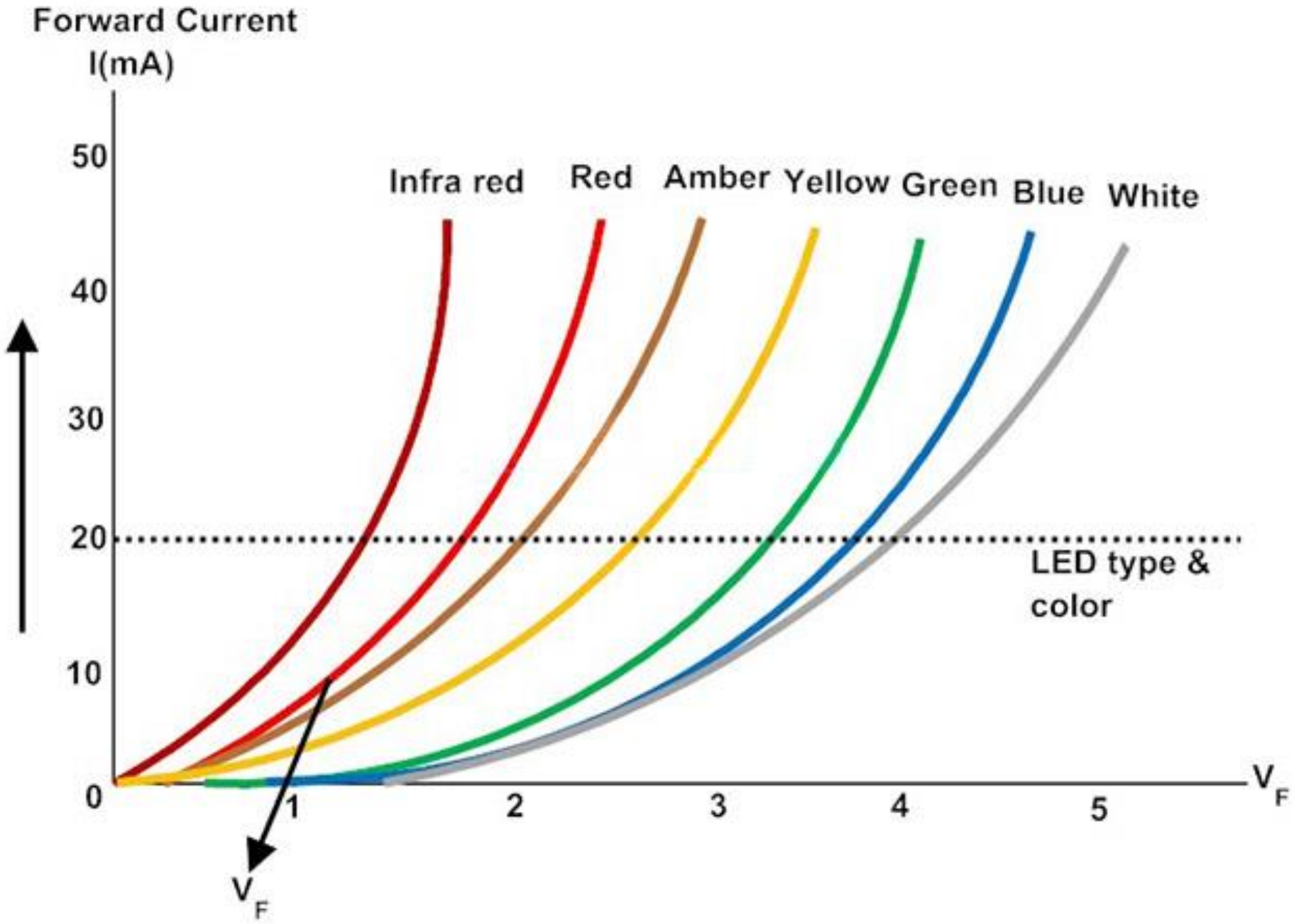
Forward Current
I(mA)
50
40
30
20
10
0
Infra red
Red
Amber
Yellow
Green
Blue
White
LED type &
color
1
2
3
4
5
V_F
V_F